TX-5060RGBW40FC120-NUVEZG-01

PRODUCT SPECIFICATION
(R&D version)

Features:

◆Excellent transiting heat from LED chip operating under RGBW:2500mA
◆High luminous output
◆No UV
◆Encapsulated materials are environmentally certified and meet environmental requirements.

Chip Material:

◆ Red:AlInGaP
◆Green: GaInN
◆Blue:GaInN
◆White:GaInN

Emitting Color:

◆Red
◆Green
◆Blue
◆White

Applications:

◆Auxiliary lighting
◆Ambient lighting
◆Architectural lighting
◆Entertainment lighting

Package Dimensions:

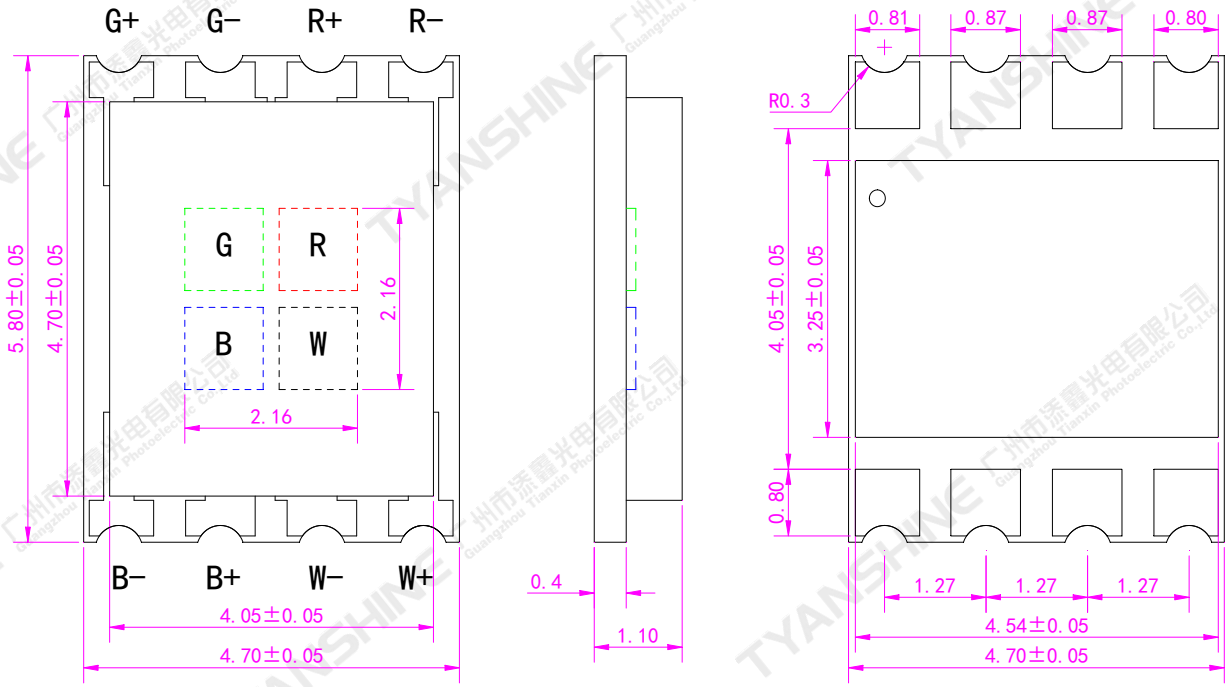

Notes:

1.All dimensions are in millimeters .

2.Tolerances unless otherwise mentioned are ±0.1mm .

Absolute Maximum Ratings (Tc=25℃)

Parameter	Symbol		Max Ratings	Unit
Forward Current	IF	R	2500	mA
		G	2500	
		B	2500	
		W	2500	
Reverse Voltage	V_R		5	V
Power Dissipation	P_D	R	7000	mW
		G	10500	
		B	9750	
		W	9500	
Junction Temperature	Tj	R	115	℃
		G	150	
		B	150	
		W	150	
Electrostatic Discharge Threshold (ESD)	ESD		2000	V
Storage Temperature	T_{stg}		-20~65	℃
Operation Temperature	T_{opr}		-30~100	

Notes:

1.Specifications are subject to change without notice.

2.The data on this specification is for reference only and the actual data is in accordance with the acknowledgment.

3.Precautions for ESD:

STATIC SHIELD Electricity and surge damages the LED. It is recommended to use a wrist band or anti-electrostatic glove when handling the LED. All devices, equipment and machinery must be properly grounded.

Electrical Optical Characteristics (Tc=25°C)

Parameter	Symbol	Condition	Emitting Color	Min.	Typ.	Max.	Units
Luminous Flux	φ_v	If=1.0A	R	100	110	125	lm
			G	215	245	265	
			B	45	52	60	
			W	235	270	300	
Dominant Wavelength	λd		R	617	622	627	nm
			G	522	527	532	
			B	446	451	456	
Peak-emission Wavelength	λp		R	627	632	637	nm
			G	516	521	526	
			B	441	446	451	
Spectral Line Half-Width	△λ		R	13	16	19	nm
			G	29	34	39	
			B	18	21	24	
			W	27	35	43	
Forward Voltage	V_f		R	2.2	2.5	2.8	V
			G	2.9	3.3	3.6	
			B	2.9	3.2	3.5	
			W	2.9	3.2	3.5	
Correlated Colour Temperature	CCT	If=1.0A	W	6000	6500	7000	K
Reverse Current	I_R	V_R=5V	R	—	—	2	μA
			G	—	—	2	
			B	—	—	2	
		—	W	Not designed for reverse operation			
Viewing Angle at 50％IV	$2\theta_{1/2}$	—	—	—	120	—	Deg
Thermal Resistance Junction to Case	$R\theta_{J-C}$	—	—	—	0.8	—	K/W
Temperature Coefficient of Voltage	V△F/T	If=1.0A	R	—	-1	—	mV/℃
			G	—	-4.9	—	
			B	—	-2.5	—	
			W	—	-1.9	—	

White light Color coordinate filing IF=1000mA

Region	CCT Range		X1	Y1	X2	Y2	X3	Y3	X4	Y4
	Min	Max								
1C	6000	6500	0.3216	0.3380	0.3128	0.3290	0.3112	0.3401	0.3207	0.3499
1A	6500	7000	0.3136	0.3235	0.3066	0.3157	0.3040	0.3285	0.3117	0.3369

Notes:

1.Luminous intensity is measured with a light sensor and filter combination that approximates the CIE eye-response curve.

2.$\theta_{1/2}$ is the off-axis angle at which the luminous intensity is half the axial luminous intensity.

3.The dominant wavelength (λd) is derived from the CIE chromaticity diagram and represents the single wavelength which defines the color of the device.

4.Luminous flux measurement tolerance:±15%.

5.Forward voltage measurement tolerance:±0.15V.

Typical Electrical/Optical Characteristics Curves

(25℃ Ambient Temperature Unless Otherwise Noted)

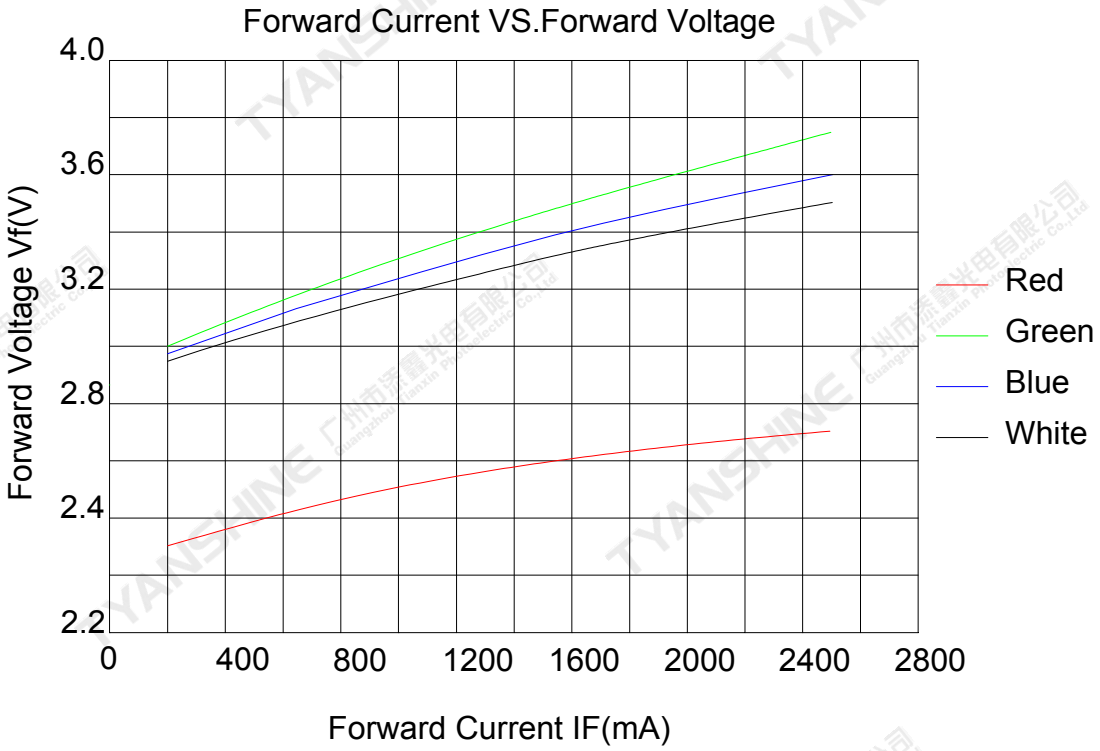

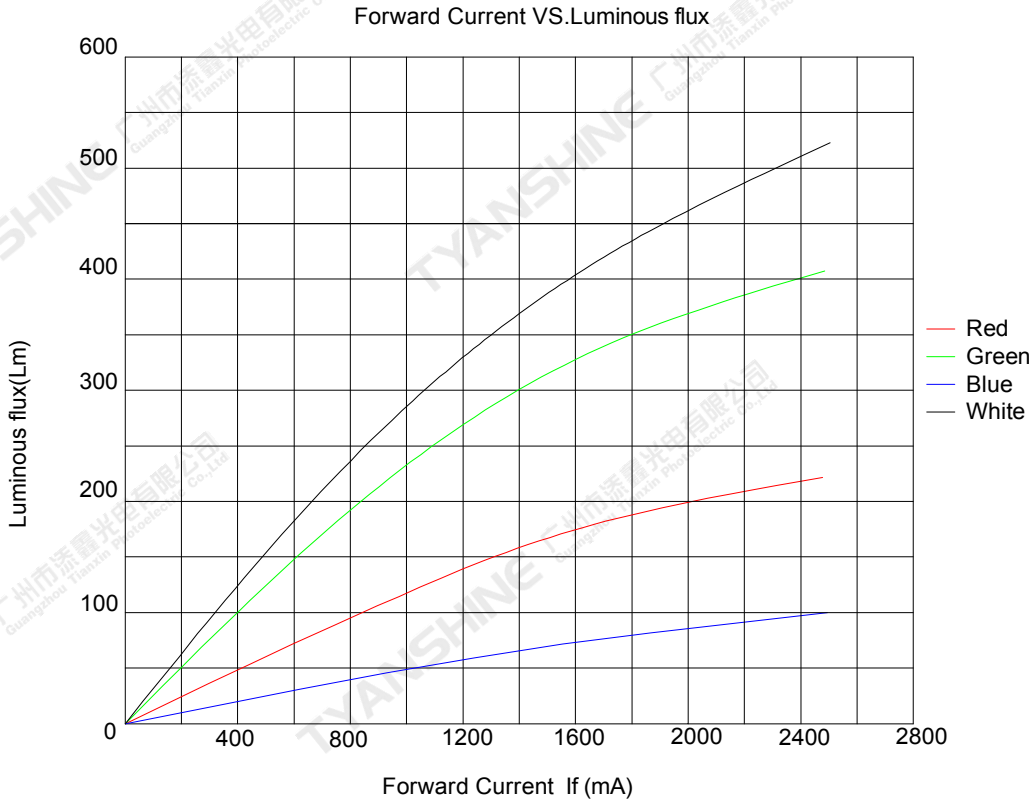

Temperature VS. Forward Voltage IF=1000mA

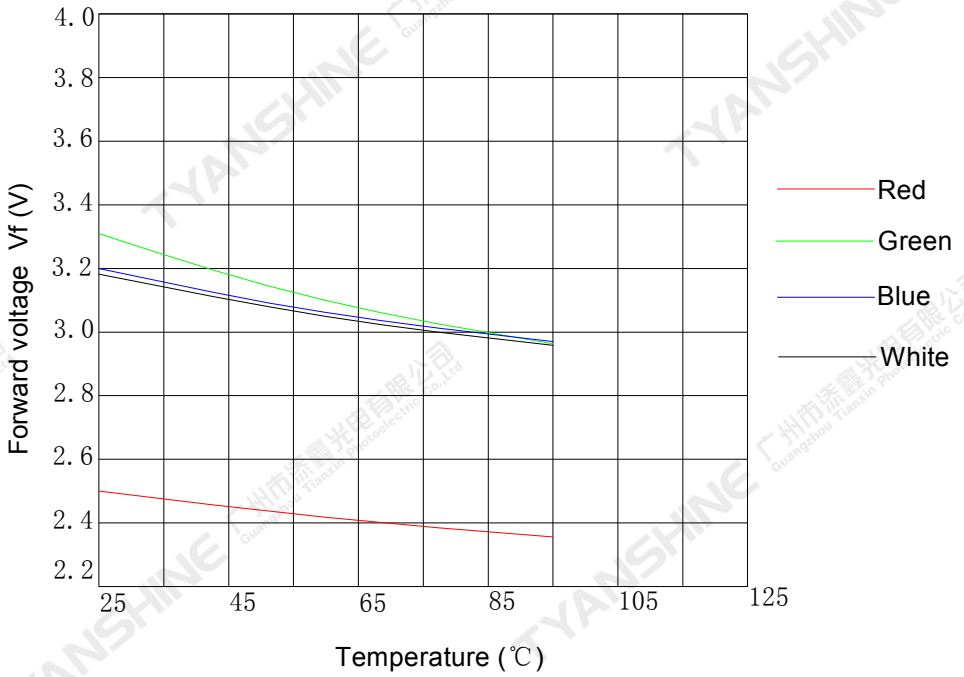

Temperature VS. Relative Luminous Flux IF =1000mA

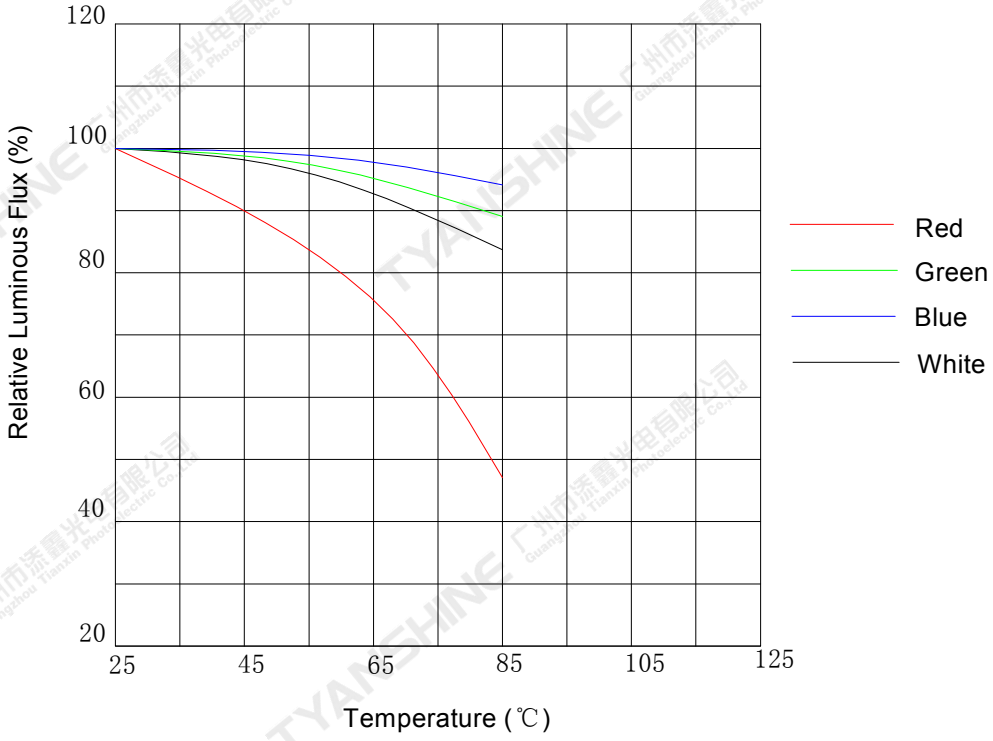

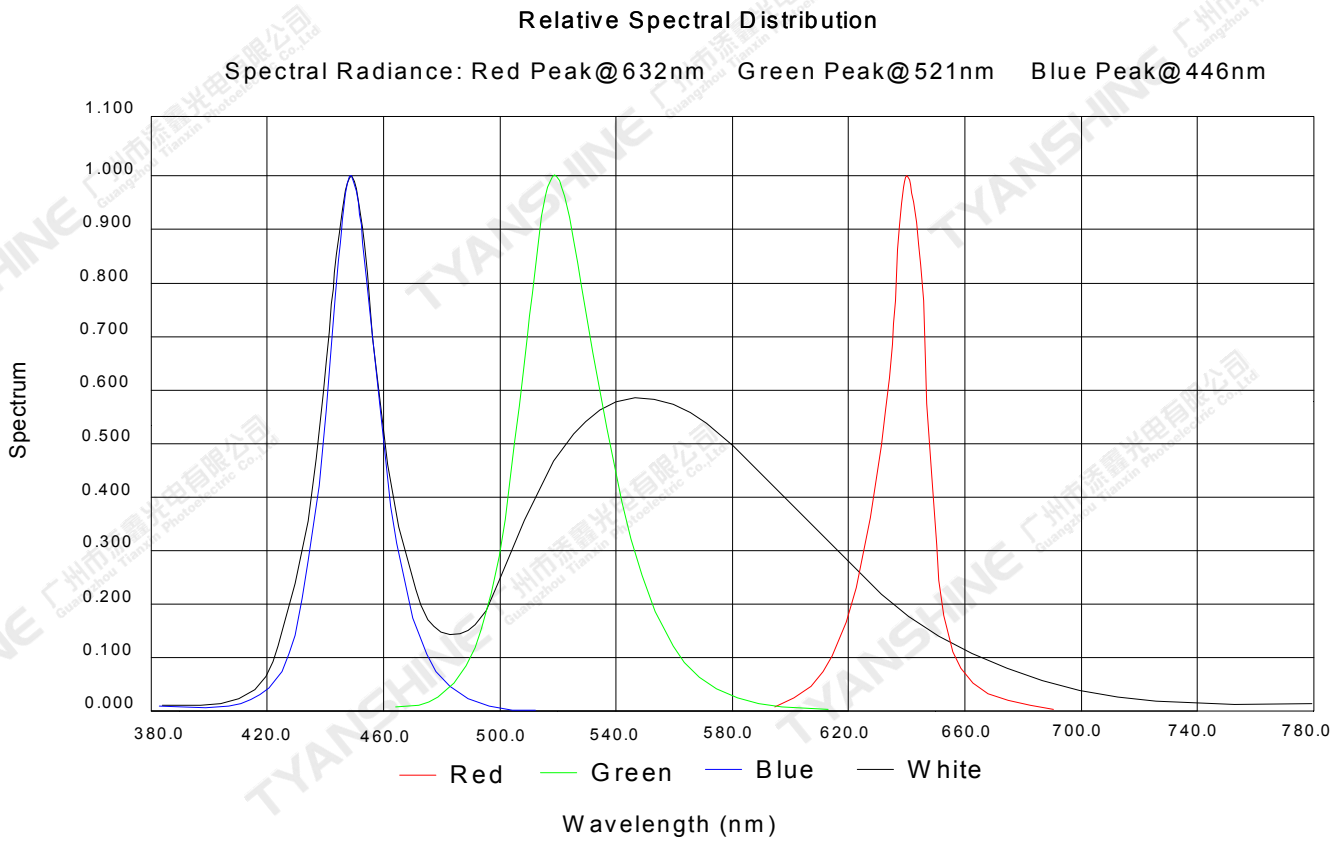

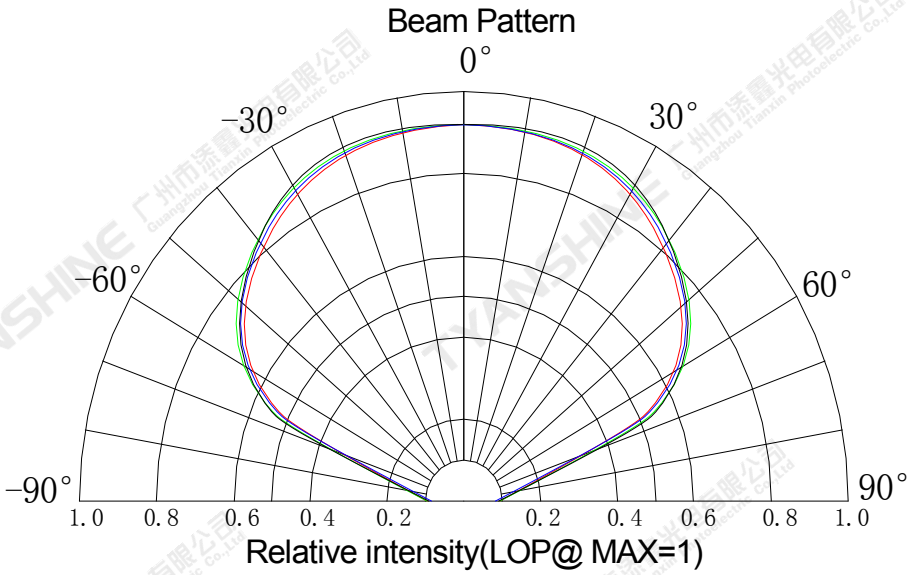

Notes:

1. 2θ 1/2 is the off axis angle from lamp centerline where the luminous intensity is 1/2 of the peak value.
2. View angle tolerance is ± 5°.

Usage Precautions

Storage Environment Condition

Temperature: 5℃ ~ 30℃ (41℉ ~ 86℉)

Humidity: 60% RH Max.

Soldering Condition

Use the conditions shown to the under figure.

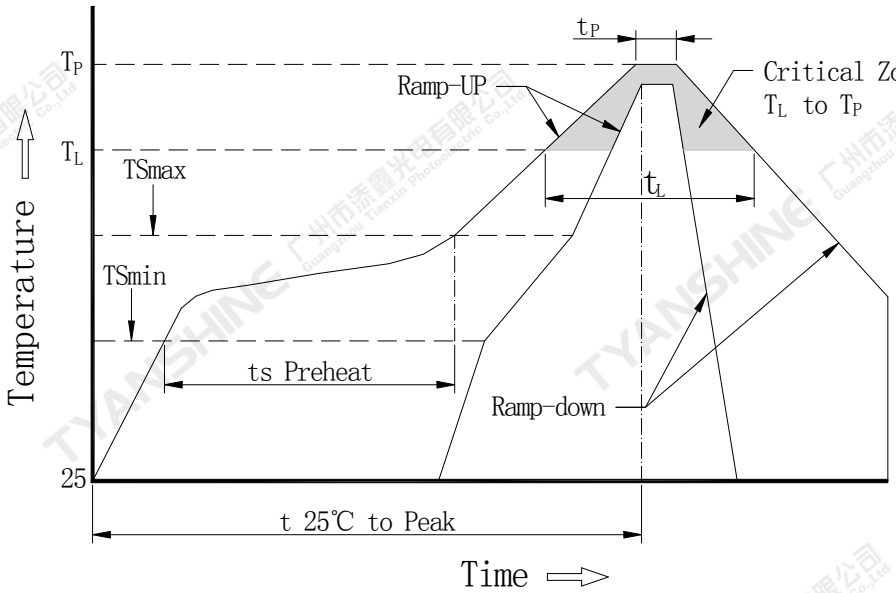

Profile Feature	Lead-Based Solder
Average Ramp-Up Rate (Ts_{max} to T_p)	3℃/second max.
Preheat: Temperature Min (Ts_{min})	100℃
Preheat: Temperature Max (Ts_{max})	150℃
Preheat: Time (Ts_{min} to Ts_{max})	60-120 seconds
Time Maintained Above: Temperature (T_L)	183℃
Time Maintained Above: Time (T_L)	60-150 seconds
Peak/Classification Temperature (T_P)	225℃
Time Within 5℃ of Actual Peak Temperature (T_P)	10-30 seconds
Ramp-Down Rate	6℃/second max.
Time 25℃ to Peak Temperature	6 minutes max.

Note:

All temperatures refer to topside of the package, measured on the package body surface.

Dimensions For Cannulation And Packaging

Quantity: 500PCS

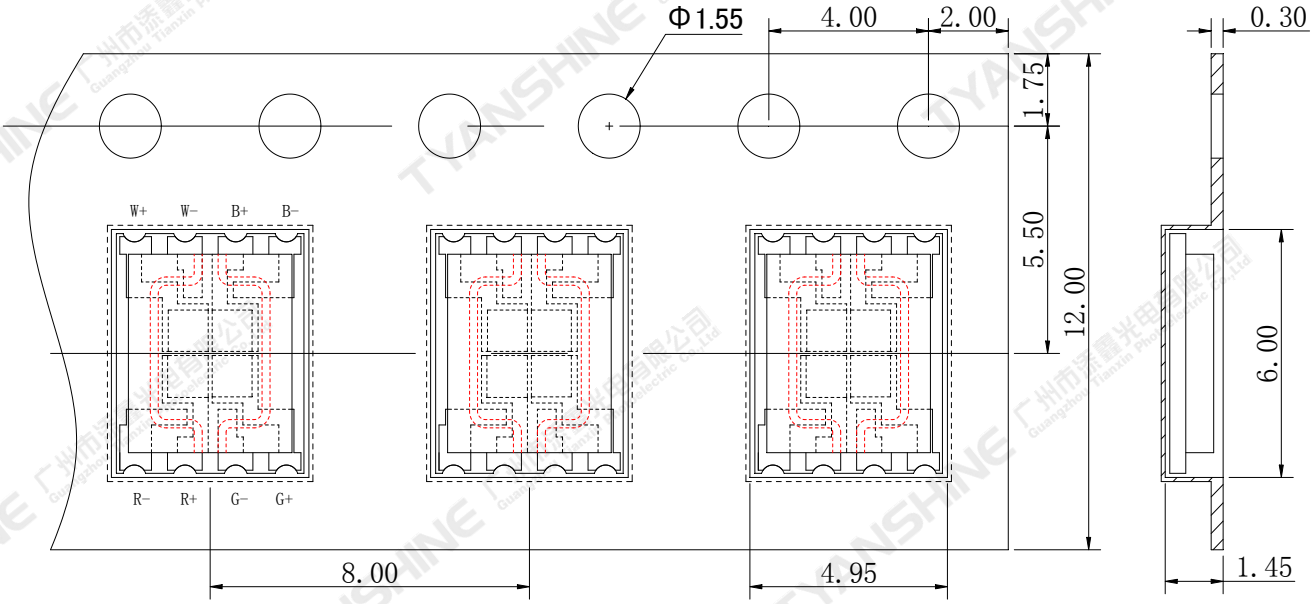

Package method(units:mm):

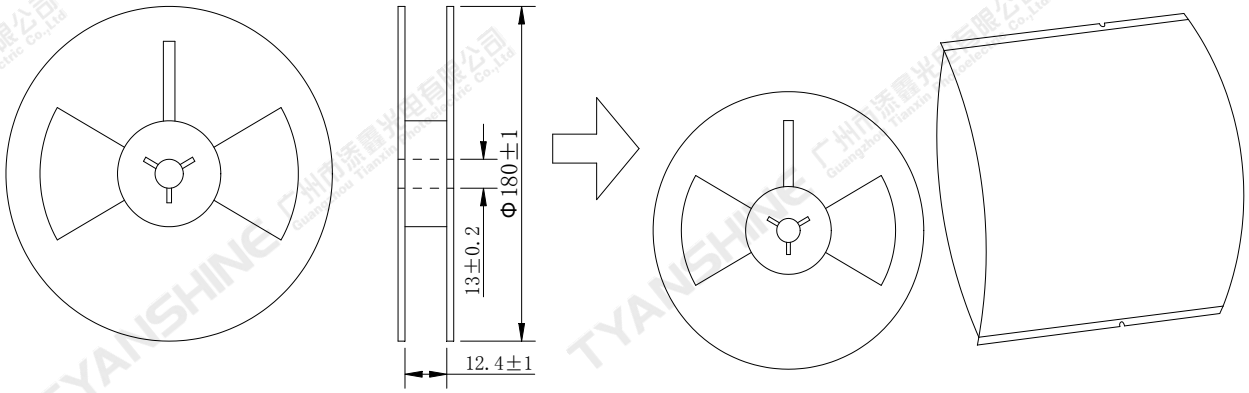

Notes:

1. All dimensions are in millimeters.
2. Tolerances are ±2.0 mm unless otherwise noted.
3. The products are packaged together with silica gel, Transport, not to the weight of welding LED light-emitting area, As a result of the weight of LED light-emitting zone in the quality of, Irresponsible of the Company.